Name: Dakotah Phend	Date: March 2019 Event: Desert Classic
City: Phoenix State: AZ	Track: Hobby Action R/C Raceway

Track Conditions: ☒ Indoor ☐ Outdoor ☐ Tight ☐ Open ☒ Smooth ☐ Rough ☒ Hard Packed ☐ Loose/Loamy ☐ Blue Groove ☒ Dry ☐ Wet ☐ Dusty ☐ Grass ☐ Astro Turf ☐ Low Bite ☐ Med Bite ☒ High Bite ☐ Other Dry Slicks

Front Suspension

Toe: +/- 0 deg
Ride Height: 28mm body off Camber: -1 degree
Caster: ☐0° ☒5°
Kick Angle: ☐20° ☒25° ☐30°
VLA Setting: ☒Short Arm ☐Long Arm
Front Pivot: ☐Alum ☒Plastic ☐HRC ☐Alum HRC
Kick Shim: ☐Brass ☒Plastic
Oil: TLR 35wt
Piston: 2 x 1.6
Spring: ☐Standard ☐Low Freq. Color: KYO Gold
Sway Bar: ☐0.8mm ☐1.0mm ☐1.2mm ☐ none
Shock Limiters: 1mm Stroke: 28mm
Shock Locations: 2 - Middle
Spindle Ball Stud: ☒Standard ☐Low Mount
Bump Steer Spacers: 0mm
Ackerman Ball Stud: ☒Standard ☐Low Mount
Ackerman Spacers: 0mm
Ackerman Arm: ☐#1 ☐#2 ☒#3 ☐
Trail: ☐2mm ☒3mm ☐4mm
Camber Link: 1 - A

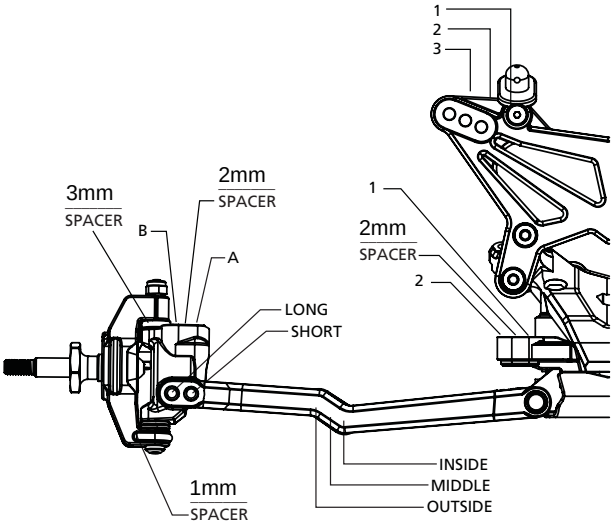

Notes: Lunsford Titanium Screws and Turnbuckles
Trinity Ceramic Bearings
SHDS Slipper
Std Material Rear Arms

Rear Suspension

Configuration: ☒Laydown ☐Standup
LD Diff. Height: ☒Standard ☐+3.5mm
Transmission Type: ☒3-Gear ☐4-Gear
Toe Inserts: ☐0.5 ☐1 ☐1.5 ☐2 ☐2.5 ☒3 ☐3.5 ☐4
Anti-Squat Inserts: ☐0 ☐0.5 ☐1 ☐1.5 ☒2 ☐2.5 ☐3
Inner Roll Center: ☒LRC ☐HRC
Ride Height: 28mm toe plate Camber: -1 degree
Rear Hub Spacing: Middle
Rear Axle Height: ☒Standard ☐+3mm
Hex Width: 22SCT STD (stock)
Sway Bar: ☐1.0mm ☐1.2mm ☐1.4mm ☐ none
Oil: TLR 30wt
Piston: 2 x 1.7
Spring: ☐Standard ☐Low Freq. Color: KYO White
Shock Limiters: 2mm Stroke: 33mm
Shock Locations: 2 - Middle
Shock Mounting: ☐Front ☒Rear
Inner Link Spacer: ☒-1mm ☐0mm ☐+1mm
Camber Link: 2 - B
Battery Position: 8mm forward from waterfall
Diff Type: ☒Ball ☐Gear Setting: Tight
Driveshaft Length: ☒CVA ☐Universal Length: 94mm

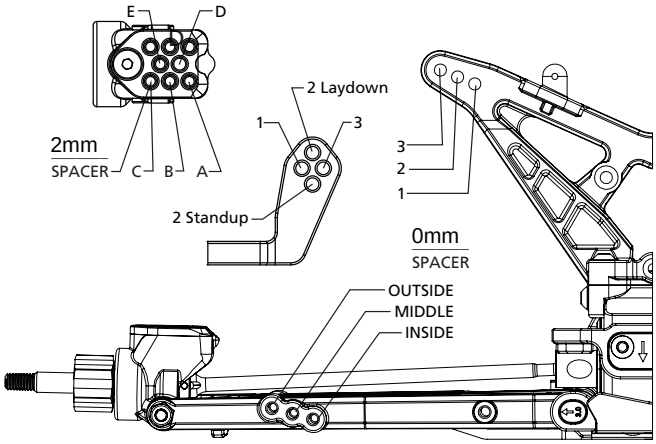

Electronics

Radio: DX6R
Servo: SPMSS6240RX
ESC: Hobbywing XR10 Pro
Initial Brake:
Drag Brake:
Throttle Profile:
Timing Advance:
Throttle/Brake Expo:
Servo Expo:
Throttle/Brake EPA:
Motor: Trinity 6.5T
Pinion: 16 Spur: 82
Battery: Trinity White Carbon 5000

Chassis

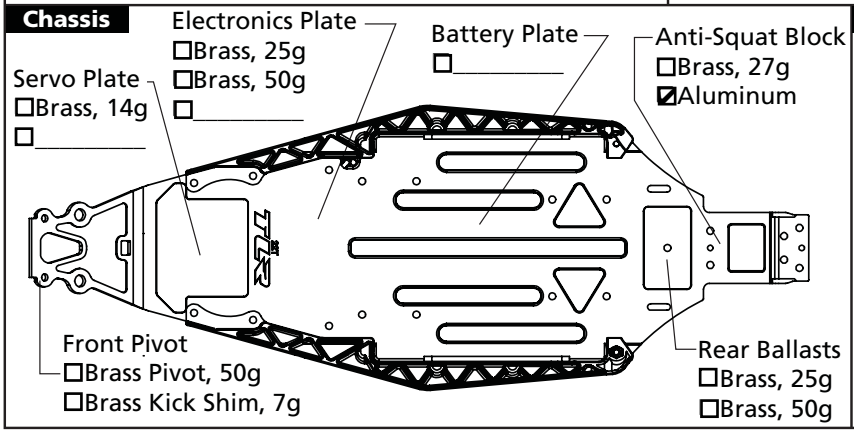

Tires

	Front	Rear
Tire:	AKA X-Link	AKA Slicks
Compound:	Clay	Clay
Insert:	AKA Red	AKA Red
Additive:		

Notes: