Gasoline Engine Powered

GSR260Z Sports

Fly, and catch the sky with JR.

SUPPLEMENTAL MANUAL

Specification Comparison		
	GSR260Z	GSR260Z Sports
Overall Length	1,623mm	
Overall width	380mm	210mm
Overall height	704mm	472mm
Gross Weight	7,800g ～	7,150g ～
	(including rotor blades)	
Main rotor diameter	1,765(JRC800)	1,785(JRC810)
Tail rotor diameter	288mm	
Gear Ratio	8:1:5.18	6.77:1:5.18
Practical Payload	4,000 ～ 5,000g	-

Parts list

This list describes both parts which have been deleted from GSR260Z, and parts which have then been added to create the GSR260Z SPORTS. Please confirm all parts are present before beginning assembling.

	Parts removed from the GSR260Z		Parts added to create the GSR260Z SPORTS	
Step No1	Pinion Gear T11	1	Pinion Gear T13	1
	Tank Cap	1	Tank Cap(with air-bleed)	1
			Spacer 2.6 × 4.5 × 3	1
Step No2	Lower Angle	2	Lower Angle ZS L/R	one for each
	Body Catch L42	2	Cross Member L86	1
			Cross Member L24	2
			Landing Skid Damper Ver.2	4
			Socket Head Bolt M3 × 10	2
Step No3	Landing Strut	2	Low Profile Landing Strut	2
	Landing Skid	2	Landing Skid	2
	Landing Strut Supporter	2	Skid Cap	4
	Landing Strut Clamp	8	Low Profile Brace Adapter	2
	Skid Cap	4	Landing Skid Damper	4
	Socket Head Bolt M2.6 × 10	32	Limited Slip Drive(LSD) System	1
	Socket Head Bolt M3 × 18	8	Limited Slip Drive(LSD) Washer	2
	Nylon Lock Nut M2.6	32	O-ring 19.8 × 23.6 × 1.9	1
	Nylon Lock Nut M3	8	Funnel	1
	Setscrew M4 × 4	4	Muffler JRM260S	1
	Landing Strut Adapter	8	Muffler Fixing Plate	1
	Landing Strut Adapter Damper	4	Socket Head Bolt M2.6 × 12	1
	Socket Head Bolt M6 × 10	4	Flat Head Bolt M3 × 8	4
	Socket Head Bolt M2.6 × 6	4	Socket Head Bolt M4 × 12	4
	Spring Washer M6	8	Socket Head Bolt M4 × 20	1
	Nut M6	4	Socket Head Bolt M5 × 20	2
	Tooth Lock Washer M6	4		
	Landing Strut Damper	4		
	Damper Rubber U Clamp	4		
	Socket Head Bolt M3 × 10	4		
	Socket Head Bolt M3 × 12	4		
	Nylon Lock Nut M3	12		
	Plate Washer M3	20		
Step No4	Spindle Shaft	1	Spindle Shaft M6	1
	Spindle Washer	2	Spindle Washer M6	2
	Socket Head Bolt M5 × 10	2	Button Head Bolt M6 × 10	2
	Flybar Weight	2		
	Setscrew M4 × 4	2		
Step No5	Tail Boom L976	1	Carbon Tail Boom L976	1
	Socket Head Bolt M3 × 16	2	Socket Head Bolt M3 × 12	2
Step No7	Front Body (Yellow)	1	Front Body(White)	1
	Rear body(Yellow)	1	Rear body(White)	1
	Horizontal Fin (Yellow)	2	Horizontal Fin(White)	2
	Carbon Main Rotor Blades JRC800	2	Carbon Main Rotor Blades JRC810	2
	Rotor Spacer t3	4	Rotor Spacer t1	4
	Body fixing screws	2	Socket Head Bolt M3 × 10	4
	Plate Washer M3	2	Bolt Holder M3	4
Out of step			GSR260Z SPORTS Supplemental Manual	1
			SPORTS LOGO Sticker	1

1-1 Clutch Bell &Pinion Gear ASSEMBLY

The Spiral Pinion Gear has been changed from T11 to T13.
There is no change to the method of assembly.

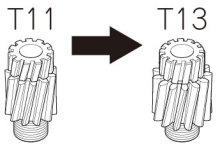

1-4 SWASH CONTROL ARM ASSEMBLY

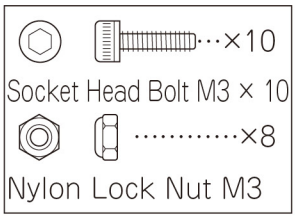

● Install the Universal Link so that the JR PROPO logo is orientated as shown in the figure below. Be sure there is no up-down movement of the Link.

● Install the Swash Control Arm Bearing Collars from the inside of the Swash Control Arm.

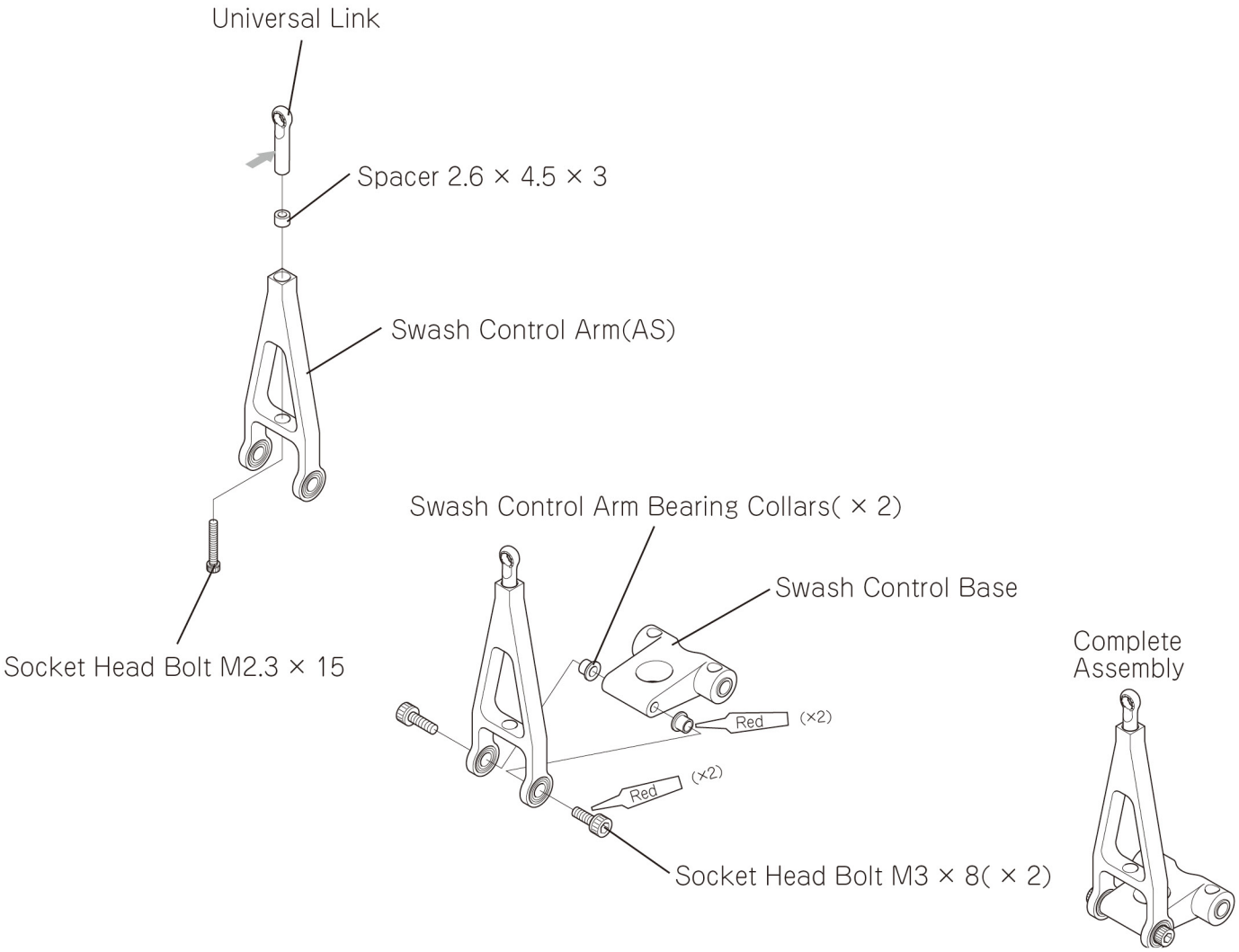

*Please note: compared to the GSR260Z, the Universal Link is placed higher due to the Spacer between the Swash Control Arm and the Universal Link.

2-3 UPPER FRAME ASSEMBLY 3

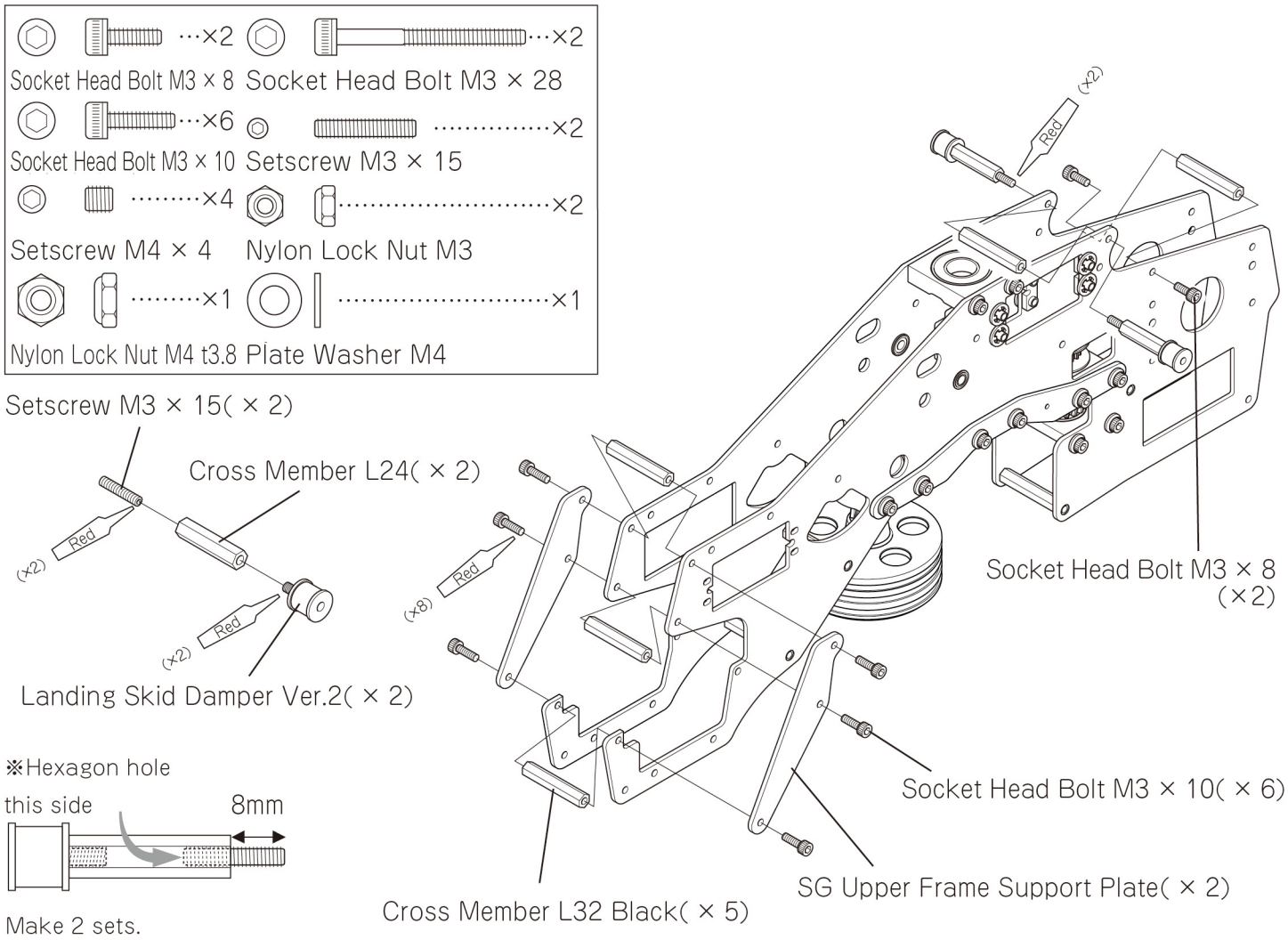

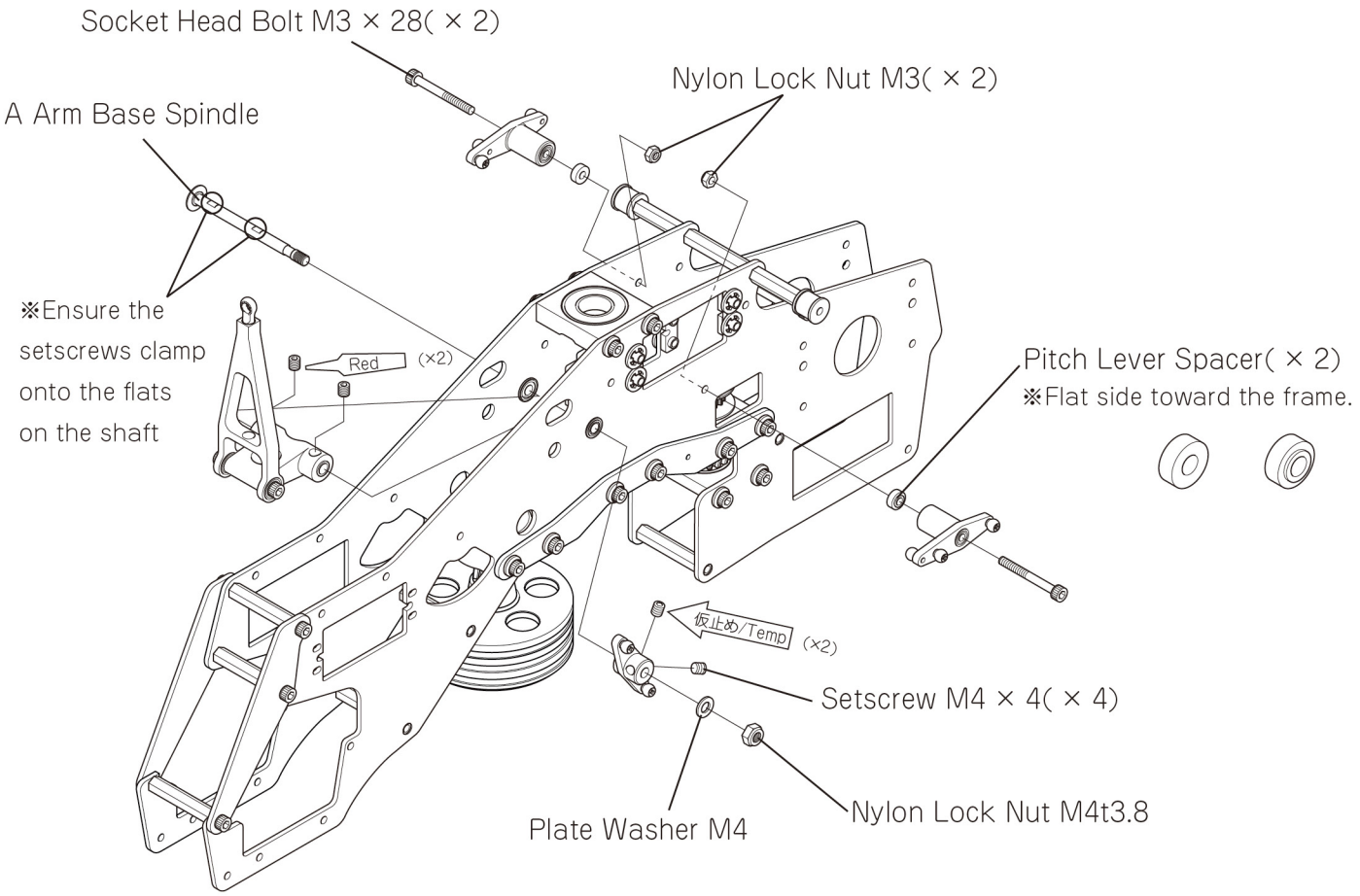

2-4 LOWER FRAME ASSEMBLY 1

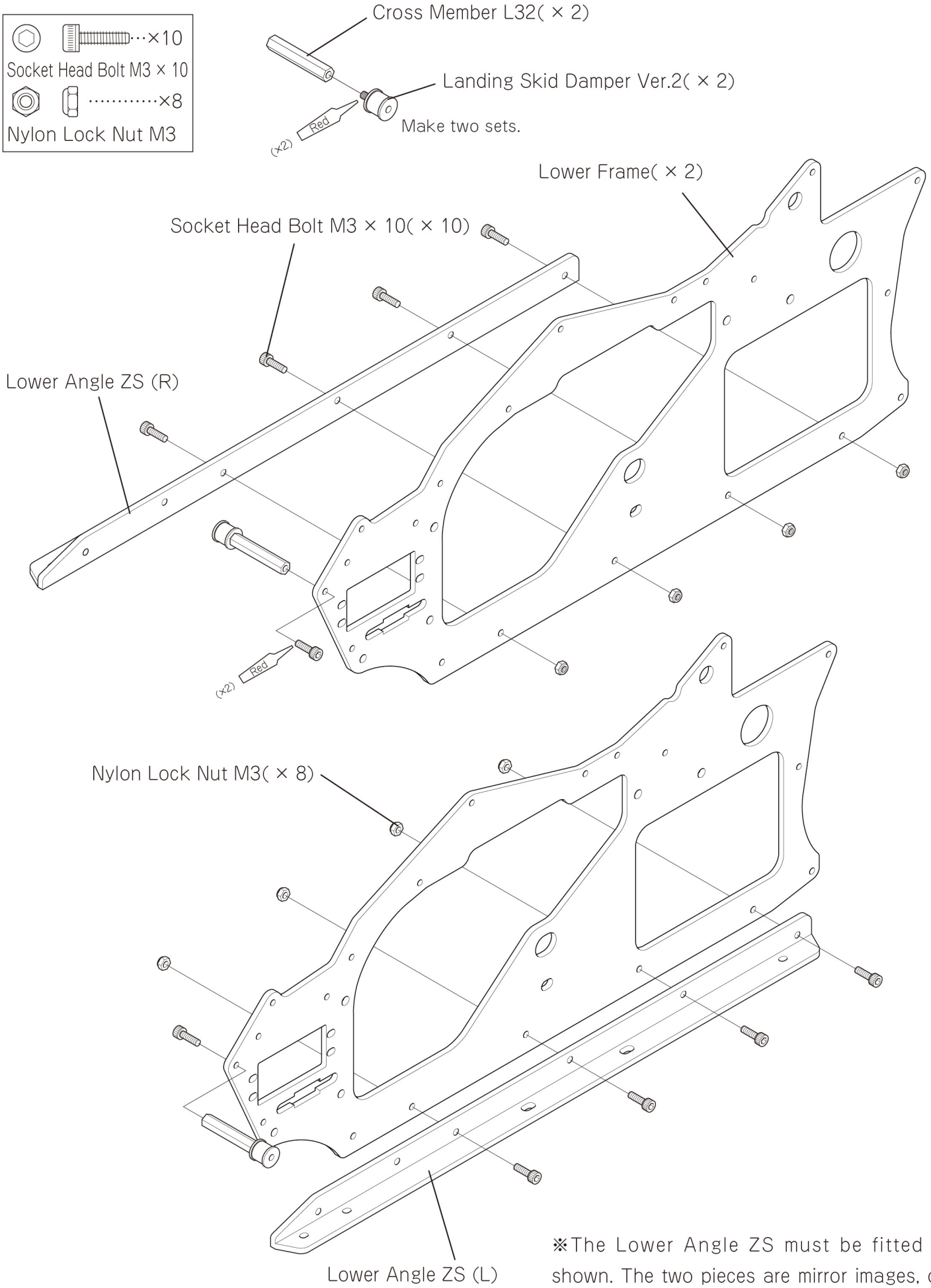

※The Lower Angle ZS must be fitted as shown. The two pieces are mirror images, one for the left and one for the right side.

2-5 LOWER FRAME ASSEMBLY 2

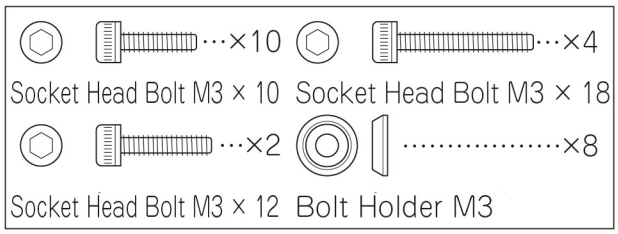

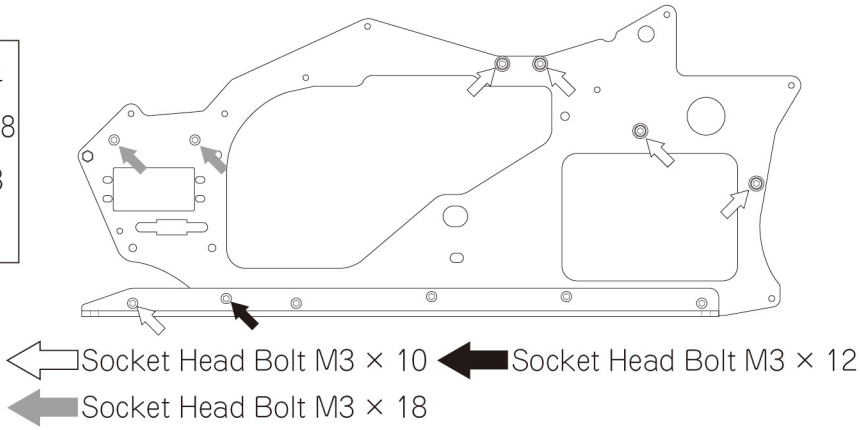

※Note the top and bottom orientation.

Narrow side up

Front Tray Spacer(× 2)

Socket Head Bolt M3 × 10(× 8)

Red (×8)

Bolt Holder M3(× 8)

Cross Member w/Step L80(× 3)

Front Tray

Lower Bearing case

Cross Member L80(× 2)

Cross Member L86

Socket Head Bolt M3 × 18(× 4)

Red (×2)

Socket Head Bolt M3 × 12(× 2)

Red (×2)

Socket Head Bolt M3 × 10(× 2)

※Please note the proper orientation of the Bearing Case.

Top

3-1 DRIVE GEAR ASSEMBLY

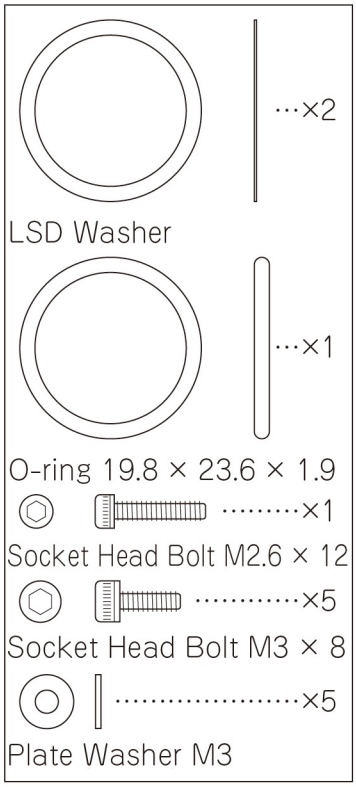

● First install the Auto Rotation Assembly onto the Main gear. Then install the Limited Slip Drive (LSD) system and Autorotation Sleeve Collar.

Now set the "Limited slip drive", which determines how much tail authority is available during autorotations.

If you want more drive power for the tail rotor, please use two "LSD washers" rather than just one.

Autorotation Sleeve

Autorotation Assembly

Spiral Main Drive Gear T88
※The gear can be fitted either way up.

O-ring 19.8 × 23.6 × 1.9

LSD Washer(× 2)
※Usually use one LSD washer, but if you want more drive power for the tail rotor during autorotations, please use two.

LSD system Z

Plate Washer M3(× 5)

Red (×5)

Socket Head Bolt M3 × 8(× 5)

Socket Head Bolt M2.6 × 12

Apply Grease / Temp

Autorotation Sleeve Collar

Complete Assembly

Round side up

3-2 DRIVE GEAR ASSEMBLY

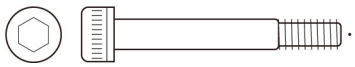

Special Socket Head Bolt M4 × 26

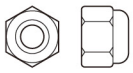

Nylon Lock Nut M4

Setscrew M4 × 4

● Pull up on the Main Shaft and press down on the Shaft stopper. Secure the Main Shaft with M4 x 4 setscrews. Make sure that the Main Shaft does not move up and down.

● Adjust the backlash so that the gear rotates freely. Then apply screw lock to the bolt securing the Bearing Case, and tighten them firmly.

*Adjust the backlash roughly to the thickness of two plastic bags containing components.

Once the gear mesh is set, there should just be slight backlash between the pinion and main gear.

● After Special Socket Head Bolt M4 x 26 is secured, apply screw lock to the Socket Head Bolt M2.6 x 12 which was temporarily positioned in the previous step and tighten firmly.

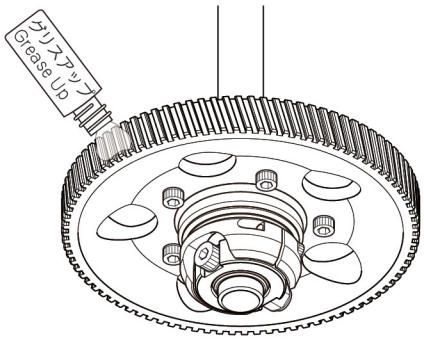

● Apply the supplied grease sparingly onto the gear.

Shaft stopper

Red (×2)

Setscrew M4 × 4(× 2)

Main Shaft

Nylon Lock Nut M4

Special Socket Head Bolt M4 × 26

3-3 LANDING STRUT ASSEMBLY

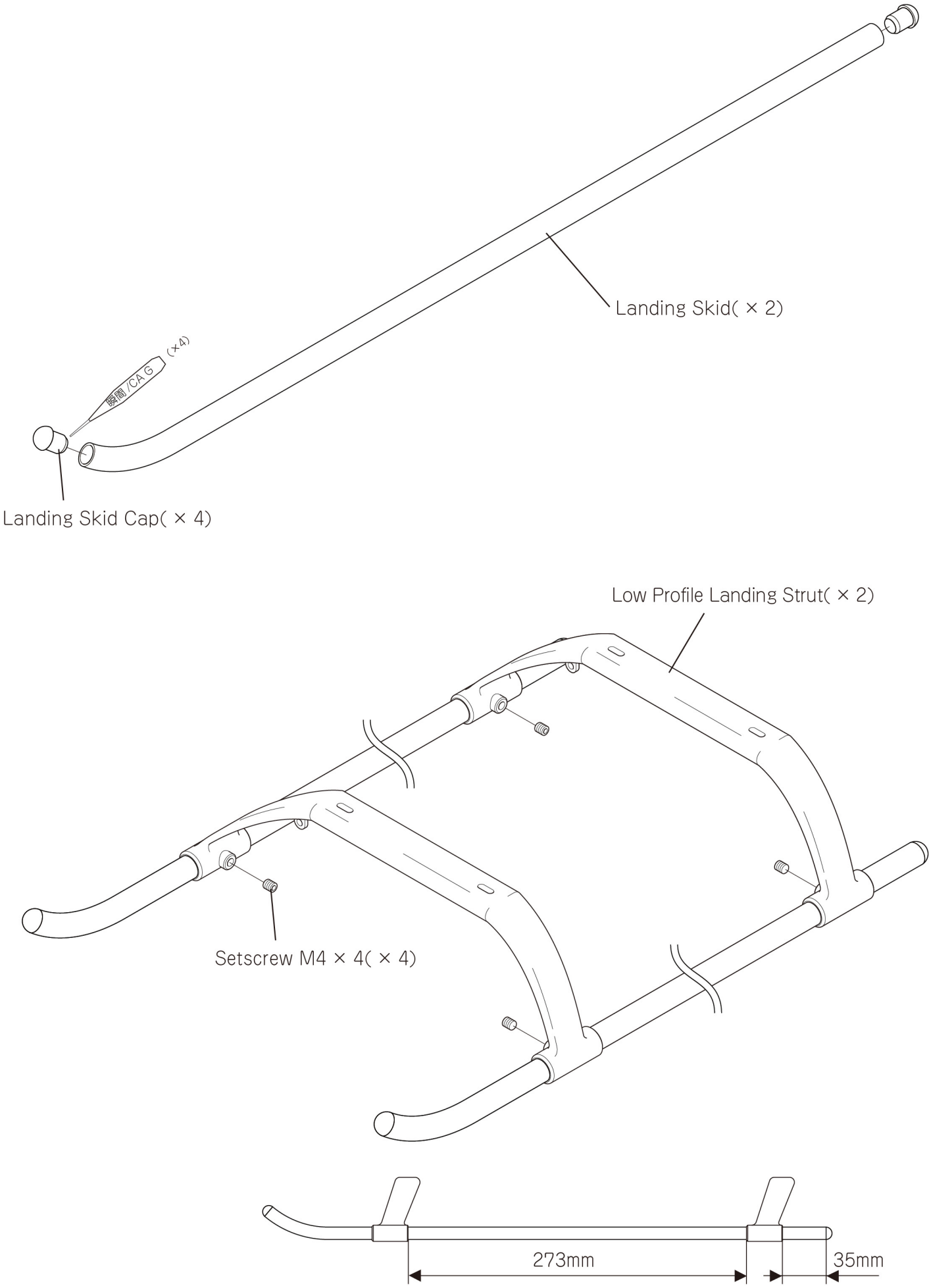

3-4 LANDING STRUT INSTALLATION

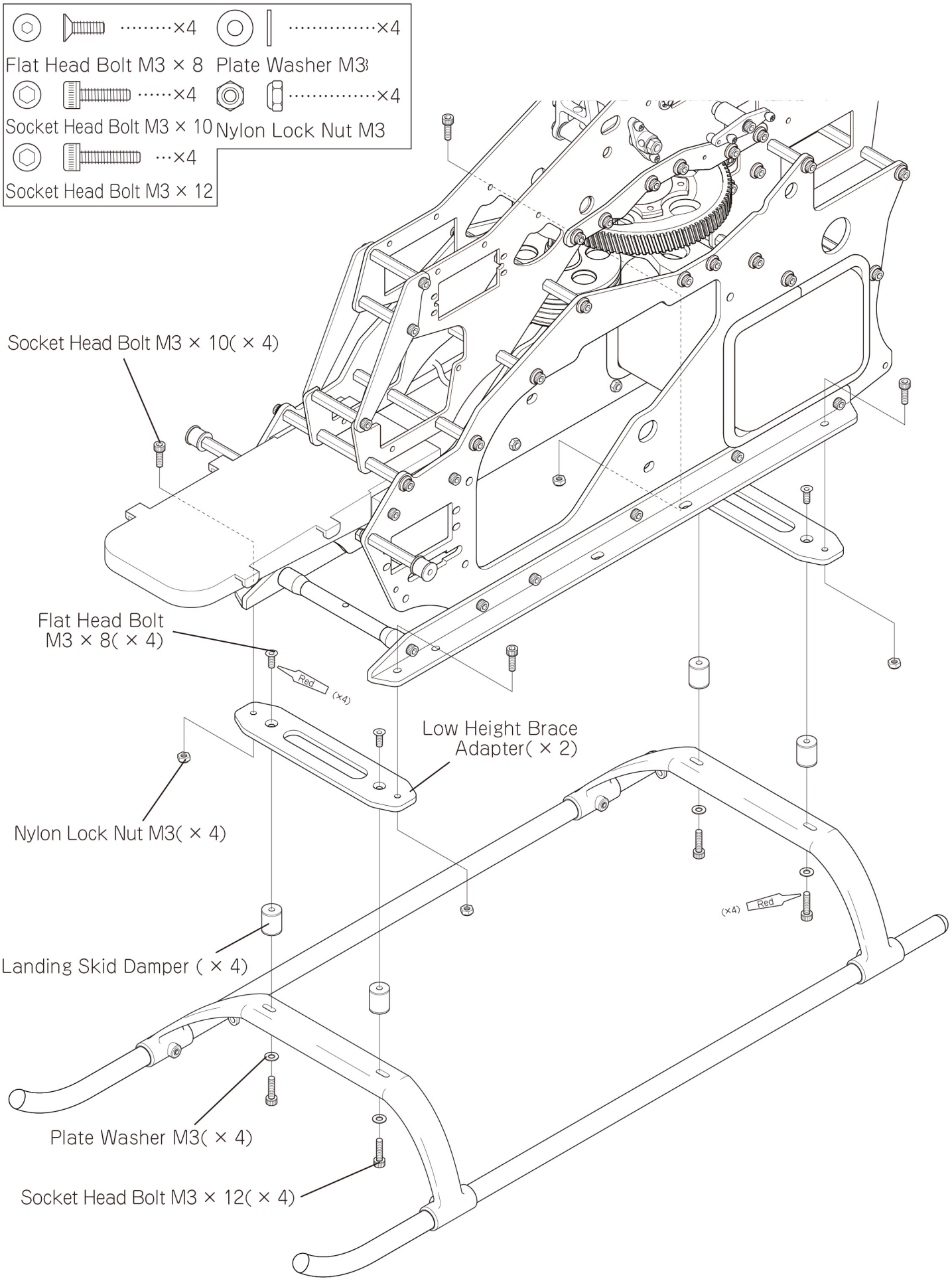

※There is no need to go through step 3-5 to 3-7.

3-14aMUFFLER FIXING PLATE · CARBURETOR INSTALLATION

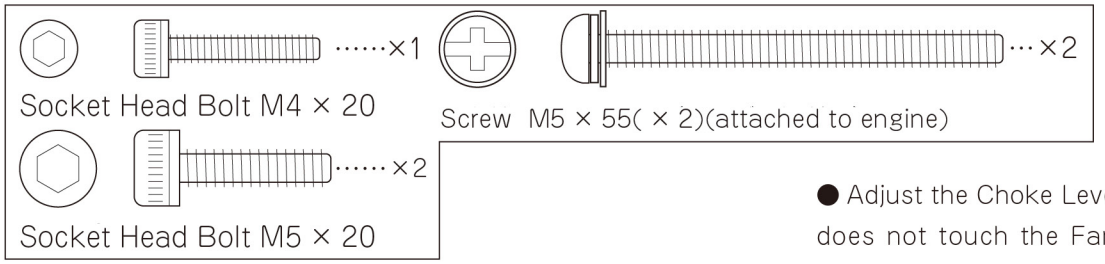

● Adjust the Choke Lever to an angle so as it does not touch the Fan cover when opening and closing it. Then apply screw lock to the Button Head Bolt M3 x 6 installed previously and now secure.

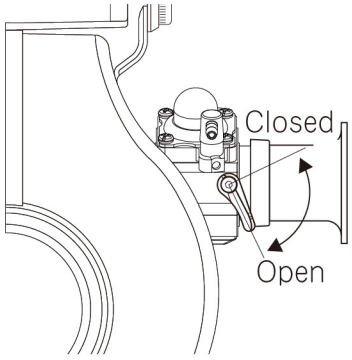

Screw M5 × 55(× 2)(attached to engine)

Funnel

Carburetor

Socket Head Bolt M5 × 20(× 2)
(attached to Engine)

Spacer (attached to Engine)

Muffler Fixing Plate

Gasket(Carburetor)
※Only one of two provided pieces are used.

Gasket(Insulator)

Gasket(Muffler)

Muffler Spacer

Socket Head Bolt M5 × 20(× 2)

Socket Head Bolt M4 × 20

● Install the removed Insulator,then install the Carburetor,Funnel and Muffler Fixing Plate.
Use the bolts supplied with the Engine. Be sure to install the Gaskets as indicated.

3-14bMUFFLER INSTALLATION

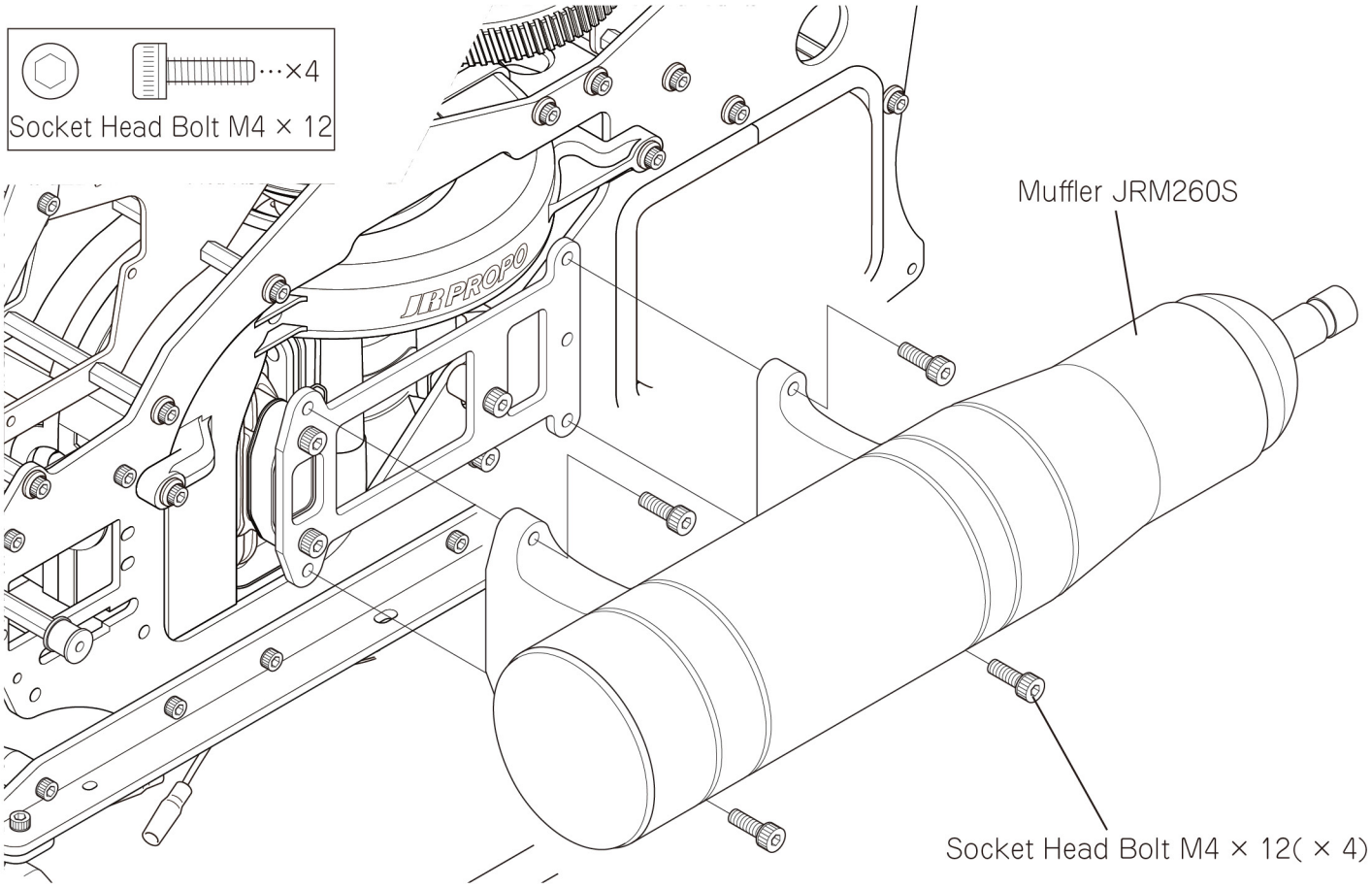

3-15 INSTALLING FUEL LINES

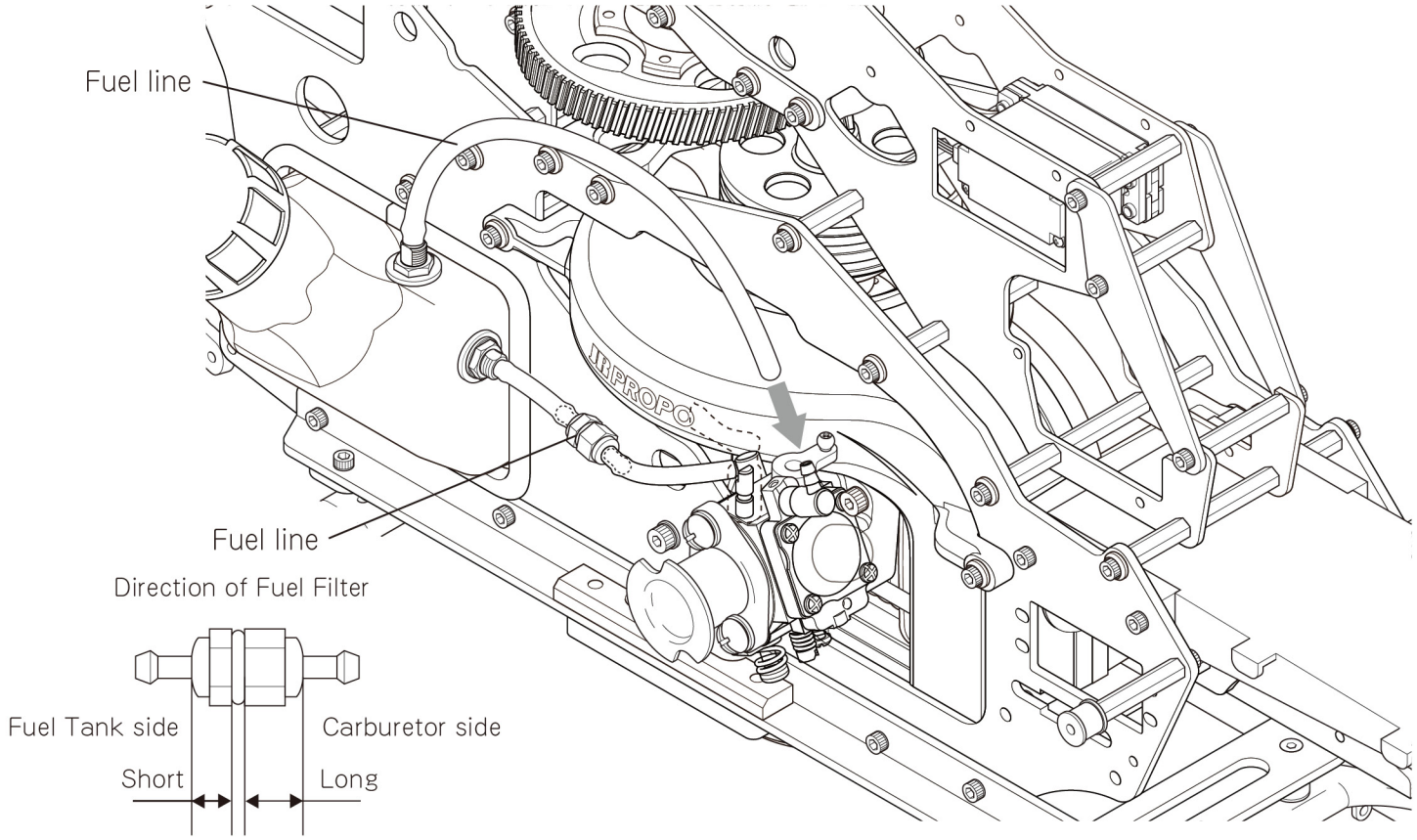

● Referring to the figure above, install the Fuel Filter in the middle of the Fuel Line (10cm) and connect to the Carburetor. Install another Fuel Line from the Carburetor to the fuel tank (for fuel return).

4-4 MAIN BLADE HOLDER ASSEMBLY

※NOTE ※ The direction of installing the Mixing Arms is different from GSR260Z. Please be aware of this.

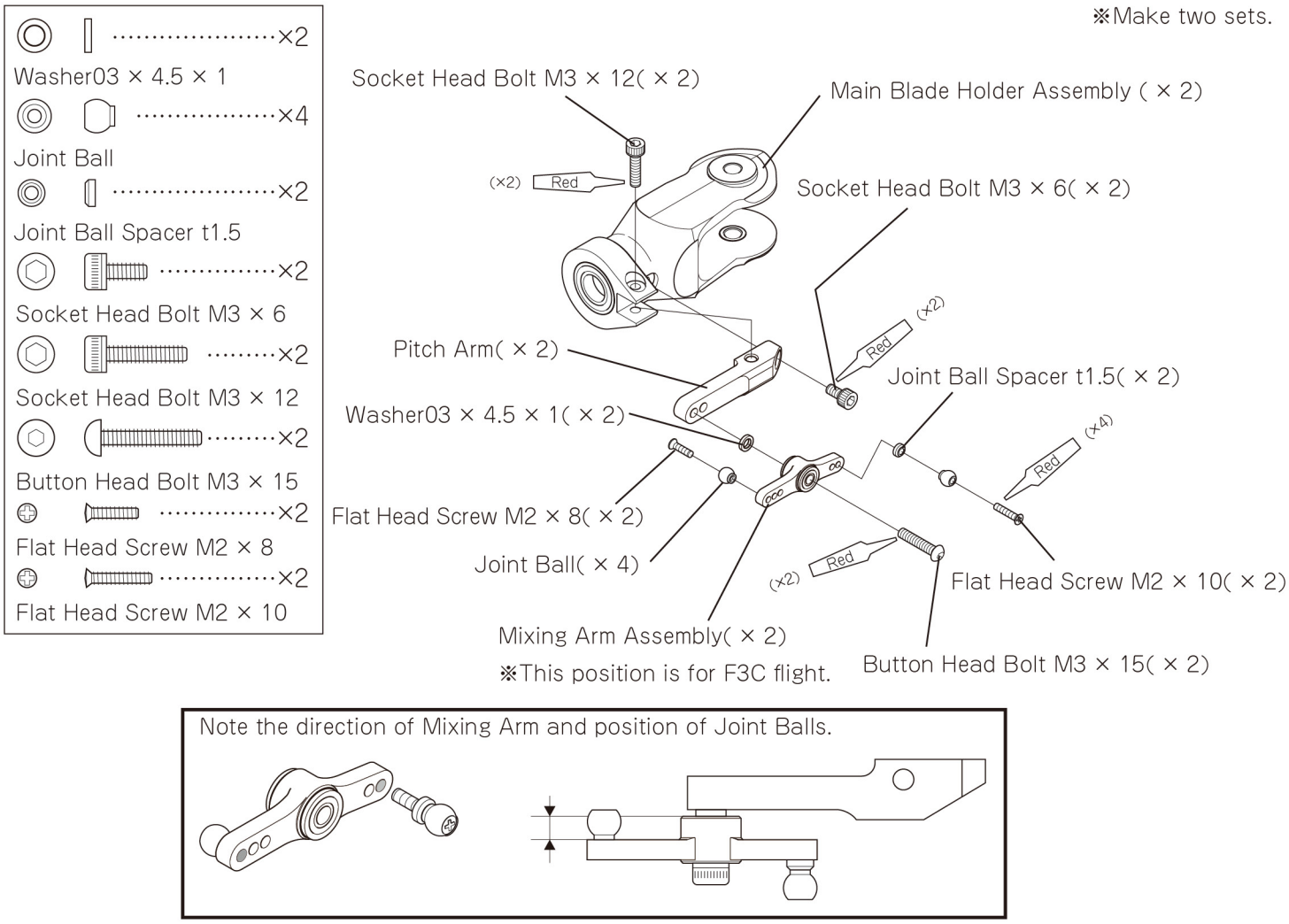

4-6 MAIN BLADE HOLDER INSTALLATION

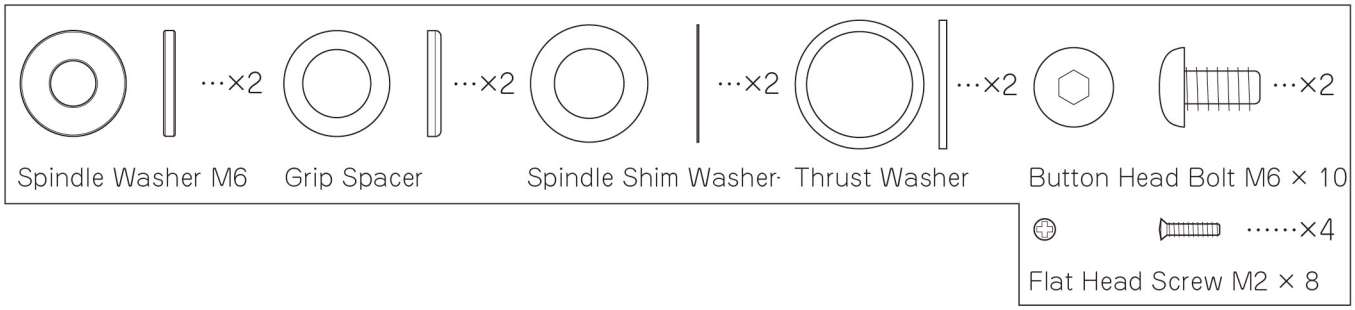

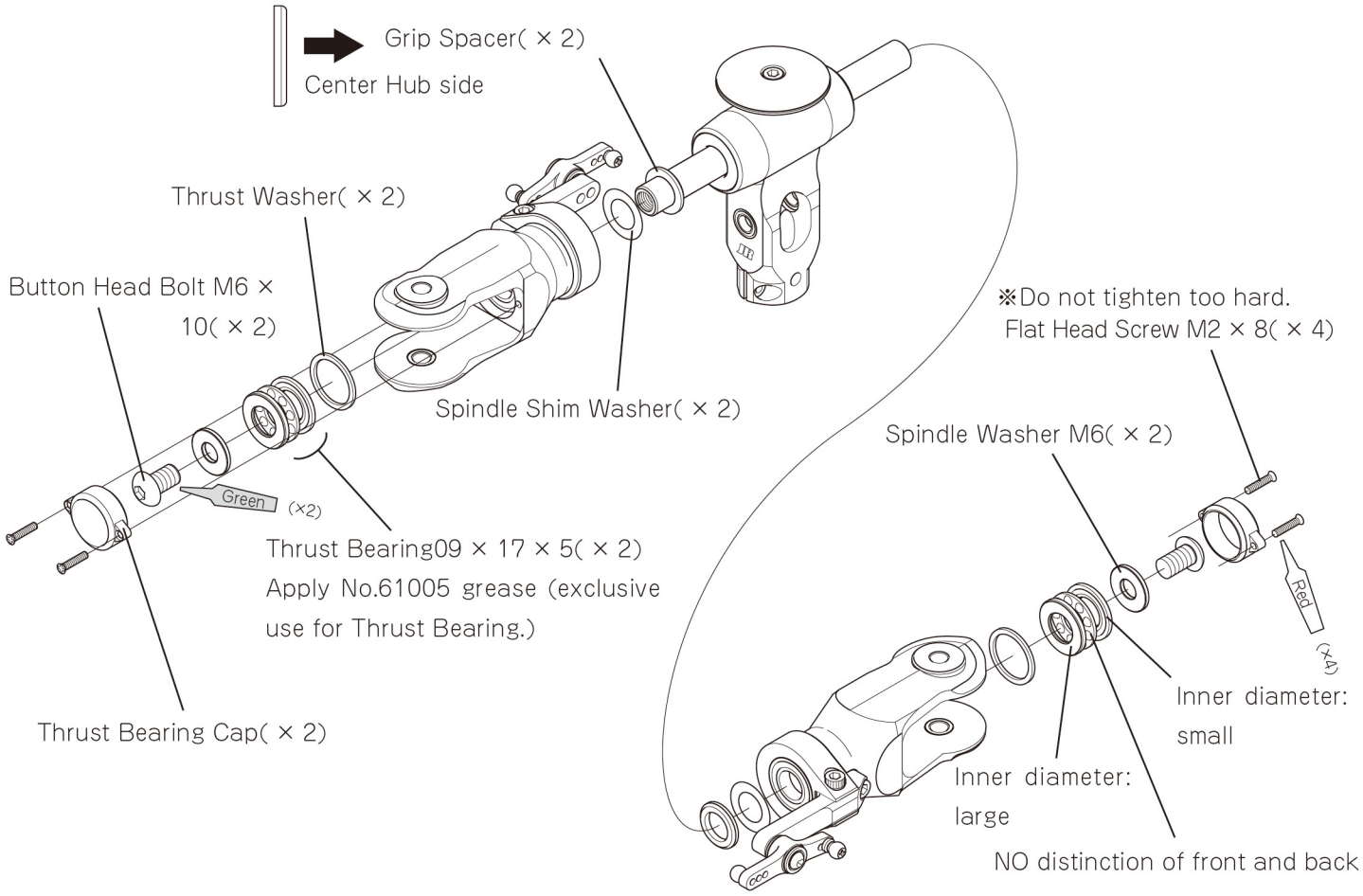

4-9 FLYBAR ARM INSTALLATION

※Make two sets

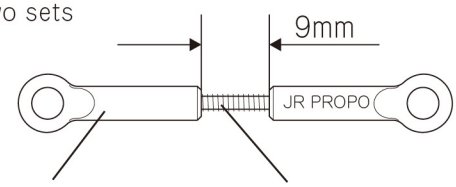

Universal Link(× 4)　　Threaded Rod M2.3 × 25(× 2)

The link length has changed compared to the GSR260Z.
There is no change in the method of assembly.

GSR260Z		GSR260Z SPORTS
11mm	→	9mm

4-11 FLYBAR PADDLE INSTALLATION

Flybar weights are not used. Please only install the Flybar Paddles.

4-12 UNIVERSAL LINK INSTALLATION

※Make two sets

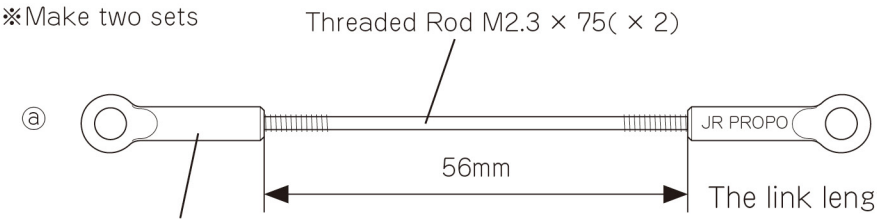

Universal Link(× 4)

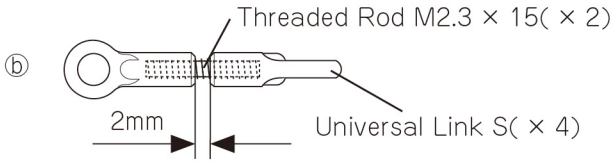

Universal Link S(× 4)

The link length has changed compared to the GSR260Z.
There is no change in the assembly method.

GSR260Z		GSR260Z SPORTS
ⓐ 60mm	→	56mm
ⓑ 3mm	→	2mm

5-2 HG TAIL GEAR CASE ASSEMBLY 2

The Tail Boom L976 has been changed from aluminum to carbon.
There is no change to the method of assembly.

5-11 TAIL BRACE SUPPORT INSTALLATION

The Length of the Socket Head Bolt at frame end has been changed from M3 x 16 to M3 x 12.
There is no change in the assembly method.

6-4 SWASH SERVO LINKAGE

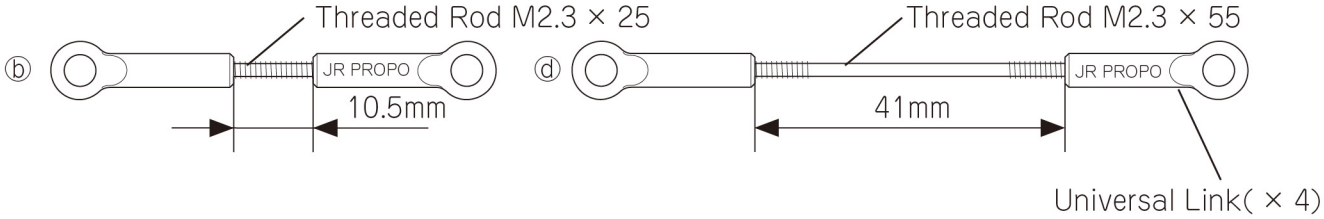

The link length has changed compared to the GSR260Z.
There is no change in the assembly method.

GSR260Z		GSR260Z SPORTS
ⓑ 7.5mm	→	10.5mm
ⓓ 38mm	→	41mm

7-5 FRONT BODY INSTALLATION

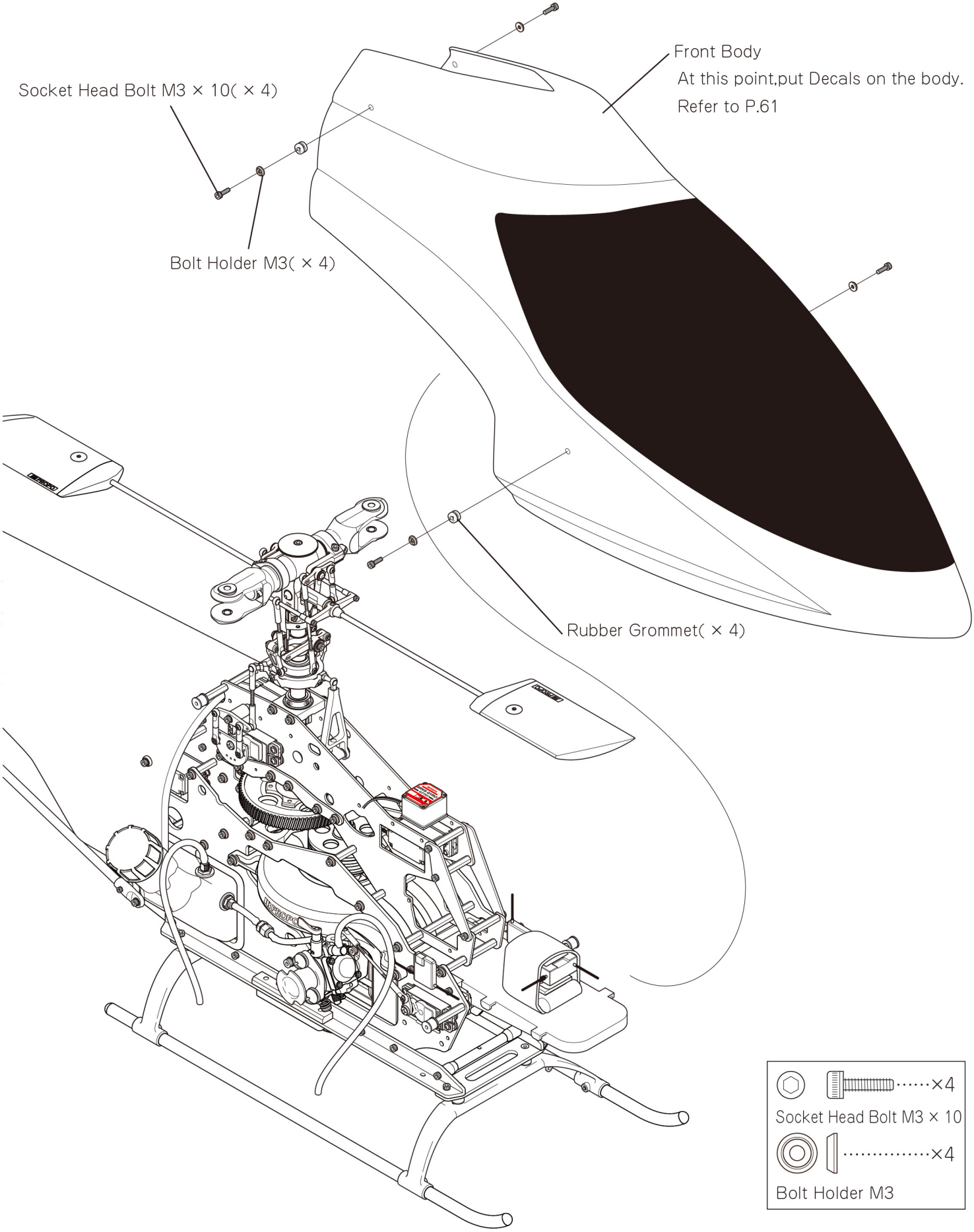

● Make a hole of 6mm diameter at the four locations as shown.

● If a conventional receiver is used,open up a hole of 4mm diameter at an optional location at the bottom of the front body to allow installation of a Switch Damper Rubber.

*When opening the holes,wear thick gloves to avoid injury.

7-7 MAIN ROTOR BLADE INSTALLATION

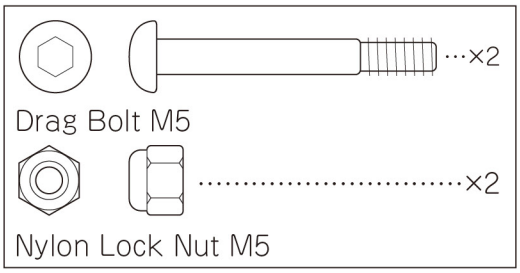

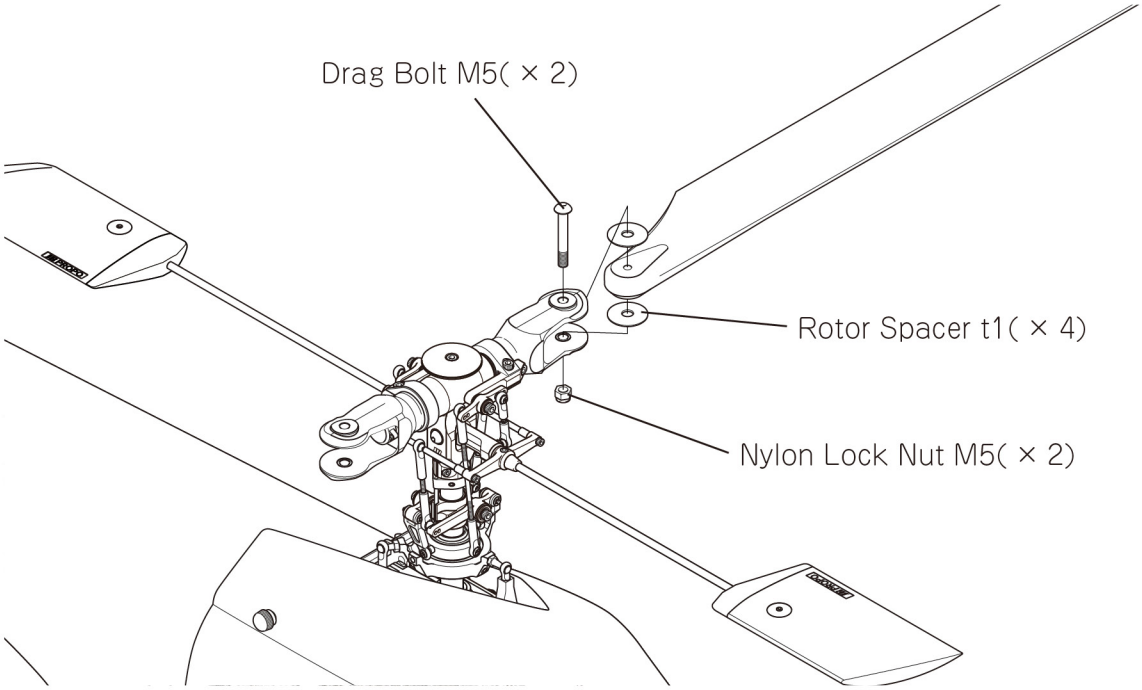

ROTOR PITCH SETUP

	Low pitch	Intermediate pitch	High pitch
Standard pitch	-8°	2°	12°
Normal	-5°	5°	10°
Stunt 1	-7°	4°	9°
Autorotation	-5°	5°	12°

※There is no change to the recommended pitch ranges.

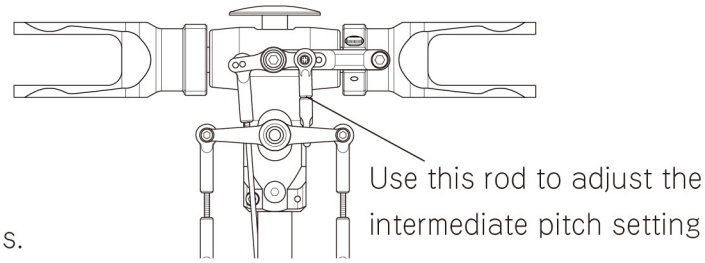

PITCH CURVE ADJUSTMENT

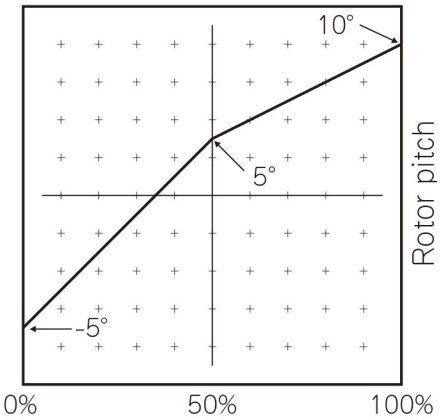

Throttle Stick Position
[normal or hovering]
Pitch curve

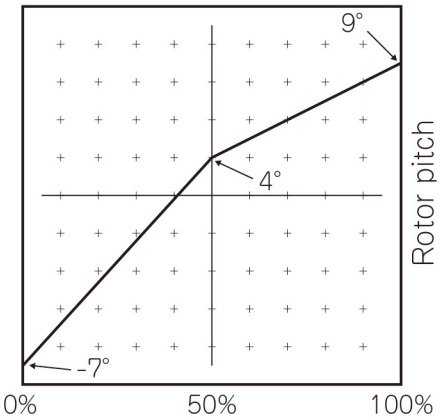

Throttle Stick Position
[Stunt]
Pitch curve

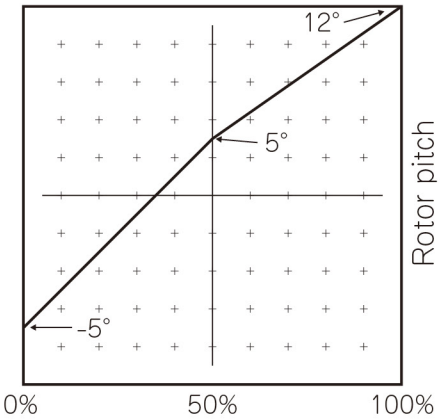

Throttle Stick Position
[Autorotation]
Pitch curve

THROTTLE CURVE ADJUSTMENT

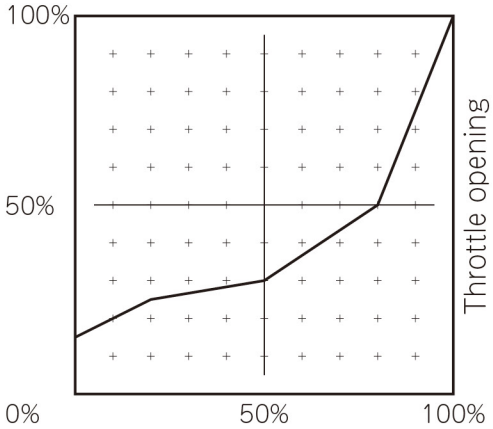

Throttle Stick Position
[normal or hovering]
Pitch curve

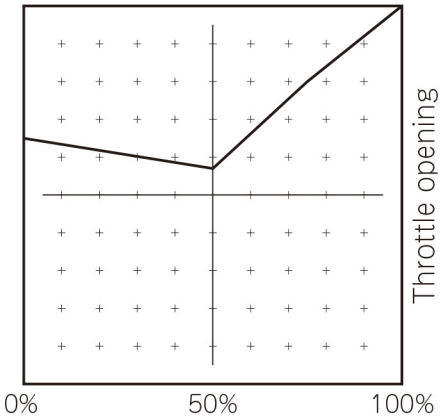

Throttle Stick Position
[Stunt]
Throttle curve

CARBURETER ADJUSTMENT

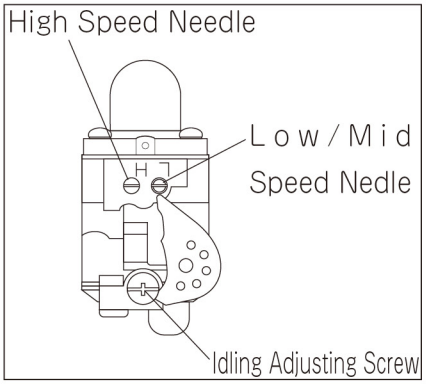

Standard Needle Positions

H	L
1½ ± ¼	1 ⅓± ¼

Position of H(High Speed Needle) is the same as the GSR260Z.

(※The values represent the number of turns open from the fully closed position)

DATA SHEET

MODEL NO. **GSR260Z SPORTS**
MODEL NAME **CCPM**

Notes

※Please adjust TRAVEL ADJUST for the Throttle based on your engine.
※Please adjust A.D.T(TRIM) when you actually fly your helicopter.
※the following figures are only a guideline, You may need to fine-tune when you are assembling and flying your helicopter.Please confirm all controls on your helicopter are functioning correctly before flying.

SERVO	: DS8305
GYRO	: G7000T
RUDDER SERVO:	MP80G

DSX12 DIGITAL PROPORTIONAL RADIO CONTROL SYSTEM

	THRO	CH-2	CH-3	RUDD	GEAR	CH-6	AUX2	AUX3	AUX4	AUX5	AUX6	AUX7
REVERSE SW	REV · (NORM)	(REV) · NORM	(REV) · NORM	REV · (NORM)	REV · (NORM)	REV · (NORM)	REV · (NORM)	REV · NORM	REV · NORM	REV · NORM	REV · NORM	REV · NORM
SUB TRIM												
TRAVEL ADJUST	H 80 % L 80 %	H120% L120%	H120% L120%	H150% L150%	H100% L100%	H120% L120%	H100% L100%	H100% L100%	H100% L100%	H100% L100%	H100% L100%	H100% L100%
FAIL SAFE	Slow											

			AILE	ELEV	RUDD	AUTO
Dual-Rate · EXP	POS0	D/R	70	70	70	NORM
			70	70	70	SW (Pos0) Pos1 Pos2 Pos3 Pos4
		EXP	20	20	60	
			20	20	60	
	POS1	D/R	100	100	60	ST-1
			100	100	60	SW Pos0 (Pos1) Pos2 Pos3 Pos4
		EXP	15	30	70	
			15	30	70	

THROTTLE HOLD	INH · ACT	HOLD Pos.	%
		STICK AUTO	INH · ( )
		Delay	INH · (s)

SWASH MIX	TYPE	1S · 2S180° (3S120°) · 3S140° · 3S90° · 4S90°		
	AILE→ELEV	L: %	R: %	
	ELEV→AILE	R: %	U: %	
	SW SELECT	NORM · ST-1 · ST-2 · ST-3 · ST-4 · HOLD		
	GAIN	AILE	+55 %	
		ELEV	+55 %	
		PITCH	-70 %	
	EXP	(ON) · OFF		
	ELEV→PIT.CACELLER	INH · ( )		
Gyro SENS	AILE D/R · ELEV D/R · RUDD D/R · FMOD SW · (AUTO)	Channel	AUX2	GEAR
		TYPE	(NORMAL) · T.LOCK	NORMAL (T.LOCK)
		Pos0/NORM	N · T 80 %	N · T 100 %
		Pos1/ST-1	N · T 70 %	N · T 100 %
		Pos2/ST-2	N · T 50 %	N · T 100 %

		EXP		L	1	2	3	4	5	6	H
THRO Curve	NORM	(OFF) · ON	IN OUT HOV.THRO	0 0 ——	13 22 (ON) · OFF	26 27 (ON) · OFF	85 40 ON · OFF	ON · OFF	ON · OFF	ON · OFF	100 100 ——
	ST-1	(OFF) · ON	IN OUT HOV.THRO	0 65 ——	50 57 ON · OFF	75 80 ON · OFF	ON · OFF	ON · OFF	ON · OFF	ON · OFF	100 100 ——
PITCH Curve	NORM	(OFF) · ON	IN OUT HOV.THRO	0 14 ——	14 50 (ON) · OFF	79 66 (ON) · OFF	ON · OFF	ON · OFF	ON · OFF	ON · OFF	100 91 ——
	ST-1	(OFF) · ON	IN OUT HOV.THRO	0 4 ——	50 60 ON · OFF	85 80 ON · OFF	ON · OFF	ON · OFF	ON · OFF	ON · OFF	100 85 ——
	HOLD	OFF · ON	IN OUT HOV.THRO	——	ON · OFF	ON · OFF	ON · OFF	ON · OFF	ON · OFF	ON · OFF	——

DSX11

	THRO	CH-2	CH-3	RUDD	GEAR	CH-6	AUX2	AUX3	AUX4	AUX5	AUX6	AUX7
REVERSE SW	REV · (NORM)	(REV) · NORM	(REV) · NORM	REV · (NORM)	REV · (NORM)	REV · (NORM)	REV · (NORM)	REV · NORM	REV · NORM	REV · NORM	REV · NORM	REV · NORM
SUB TRIM												
TRAVEL ADJUST	H 80 % L 80 %	H120% L120%	H120% L120%	H150% L150%	H100% L100%	H120% L120%	H100% L100%	H100% L100%	H100% L100%	H100% L100%	H100% L100%	H100% L100%
FAIL SAFE	Slow											

			AILE	ELEV	RUDD	AUTO
Dual-Rate · EXP	POS0	D/R	70	70	70	NORM
			70	70	70	SW (Pos0) Pos1 Pos2 Pos3 Pos4
		EXP	20	20	60	
			20	20	60	
	POS1	D/R	100	100	60	ST-1
			100	100	60	SW Pos0 (Pos1) Pos2 Pos3 Pos4
		EXP	15	30	70	
			15	30	70	
THROTTLE HOLD	INH · ACT	HOLD Pos.			%	
		STICK AUTO		INH · ( )		
		Delay		INH · (s)		

SWASH MIX	TYPE	1S · 2S180° · (3S120°) · 3S140° · 3S90° · 4S90°		
	AILE→ELEV	L: %	R: %	
	ELEV→AILE	R: %	U: %	
	SW SELECT	NORM · ST-1 · ST-2 · ST-3 · ST-4 · HOLD		
	GAIN	AILE	+55 %	
		ELEV	+55 %	
		PITCH	-70 %	
	EXP	(ON) · OFF		
	ELEV→PIT.CACELLER	INH · ( )		
Gyro SENS	AILE D/R · ELEV D/R · RUDD D/R · FMOD SW · (AUTO)	Channel	GEAR	AUX2
		TYPE	NORMAL · (T.LOCK)	(NORMAL) · T.LOCK
		Pos0/NORM	N · T 100 %	N · T 80 %
		Pos1/ST-1	N · T 100 %	N · T 66 %
		Pos2/ST-2	N · T 100 %	N · T 50 %

		EXP		L	1	2	3	4	5	6	H
THRO Curve	NORM	(OFF) · ON	IN OUT HOV.THRO	0 15 ——	20 24 (ON) · OFF	50 30 (ON) · OFF	80 50 ON · OFF	ON · OFF	ON · OFF	ON · OFF	100 100 ——
	ST-1	(OFF) · ON	IN OUT HOV.THRO	0 65 ——	50 57 ON · OFF	75 80 ON · OFF	ON · OFF	ON · OFF	ON · OFF	ON · OFF	100 100 ——
PITCH Curve	NORM	(OFF) · ON	IN OUT HOV.THRO	0 9 ——	20 56 (ON) · OFF	50 66 (ON) · OFF	80 76 ON · OFF	ON · OFF	ON · OFF	ON · OFF	100 93 ——
	ST-1	(OFF) · ON	IN OUT HOV.THRO	0 0 ——	50 61 ON · OFF	ON · OFF	ON · OFF	ON · OFF	ON · OFF	ON · OFF	100 86 ——
	HOLD	OFF · ON	IN OUT HOV.THRO	——	ON · OFF	ON · OFF	ON · OFF	ON · OFF	ON · OFF	ON · OFF	——

PCM9X II

			AILE	ELEV	RUDD
D/R・EXP	Pos0	D/R	70	70	70
			70	70	70
		EXP	20	20	60
			20	20	60
	Pos1	D/R	100	100	60
			100	100	60
		EXP	15	30	70
			15	30	70
AUTO D/R	NORM	INH・POS-0・POS-1・POS-2			
	ST-1	INH・POS-0・POS-1・POS-2			

GYRO SENS (AUX2)	INH RUDD D/R AUTO		NORM	Pos-0・Pos-1/Pos-2
			ST-1	Pos-0・Pos-1/Pos-2
			ST-2	Pos-0・Pos-1/Pos-2
	Pos.0	80%	ST-3	Pos-0・Pos-1/Pos-2
	Pos.1	68%	ST-4	Pos-0・Pos-1/Pos-2
	Pos.2	68%	HOLD	Pos-0・Pos-1/Pos-2

THRO HOLD	INH・ACT	
	POS	%
	STICK AUTO	
	Delay	sec

SWASH MIX	TYPE		AILE	+55%
	1S・2s180		ELEV	+55%
	3s 120°	・3s140	PIT.	-70%
	3s 90°	・4s90	EXP	INH・ACT

	THRO	AILE	ELEV	RUDD	GEAR	PIT.	AUX2	AUX3	AUX4
REVERSE SW	NORM	REV	REV	NORM	NORM	NORM	NORM	NORM	NORM
SUB TRIM	0	0	0	0	0	0	0	0	0
TRAVEL ADJUST	H %	L 120%	D 120%	L 150%	+ 100%	H 120%	+ 100%	+ 100%	+ 100%
	L %	R 120%	U 120%	R 150%	- 0%	L 120%	- 100%	- 100%	- 100%
FAIL SAFE(SPCM)	F.S.	HOLD	HOLD	HOLD	HOLD	HOLD	HOLD	HOLD	HOLD

		EXP	L	1	2	3	4	5	H
THRO CURVE	NORM	OFF	0%	20%	INH	30%	INH	35%	100%
	ST1	OFF	65%			57%		86%	100%
PITCH CURVE	NORM	OFF	14.5%	50%		60%		70	100%
	ST1	OFF	0%			60%			84%
	HOLD	OFF							

PARTS LIST FOR THE GSR260Z SPORT (EXCLUSIVE USE)

This figure shows parts for GSR260Z SPORTS (exclusive use) . Please make sure to purchase the correct parts if you wish to maintain and repair your helicopter.

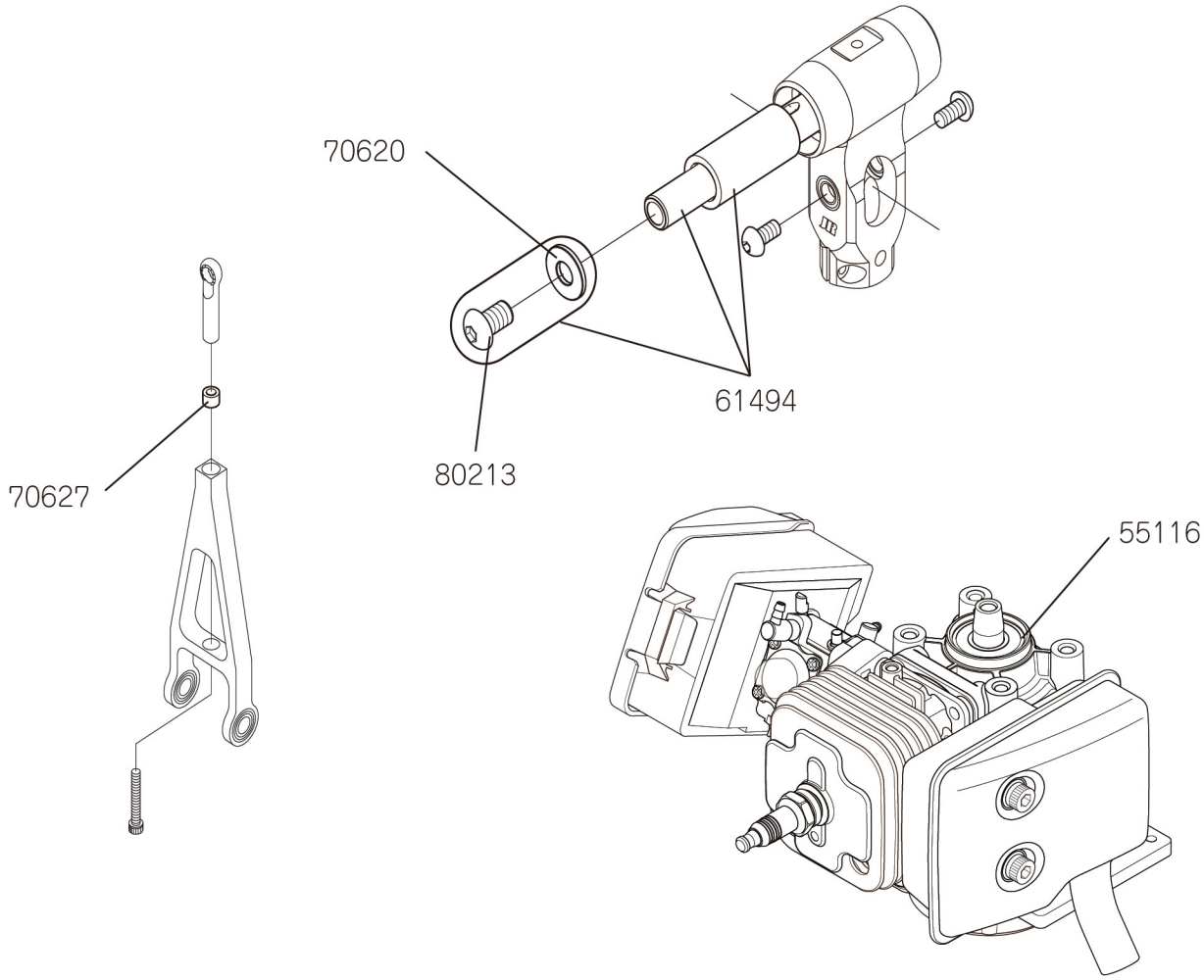

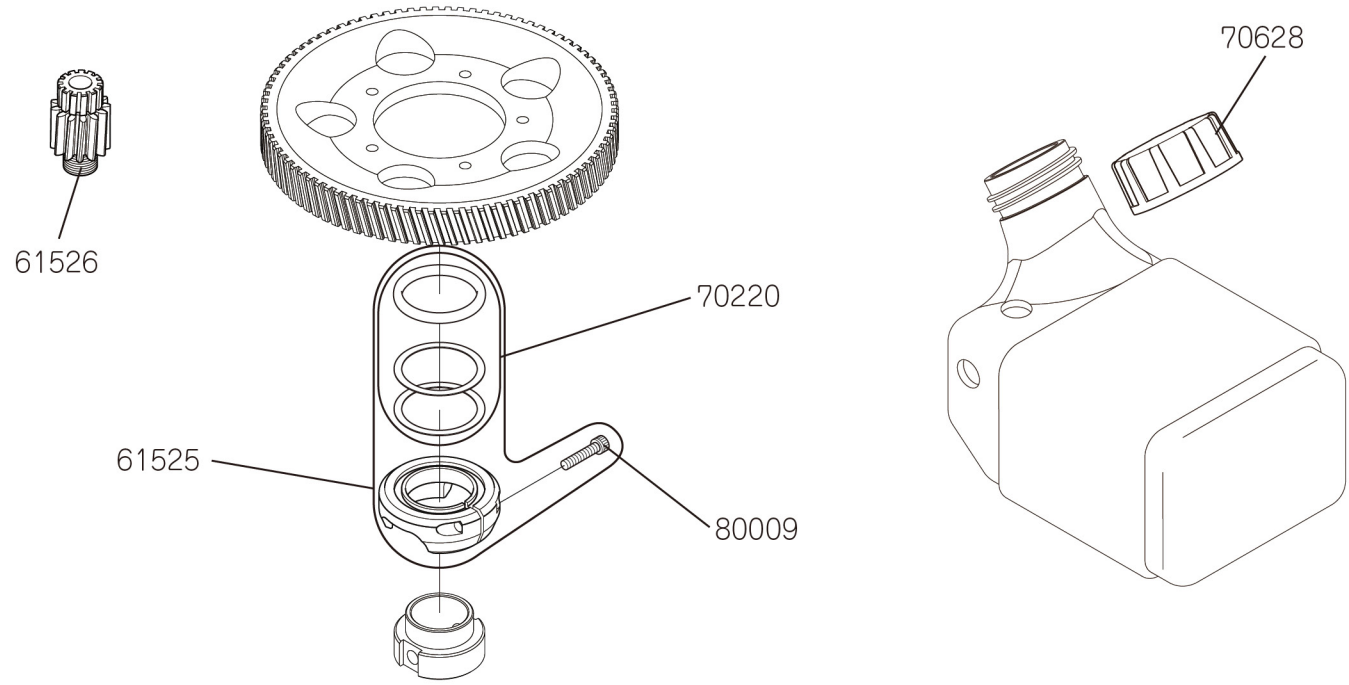

55116	Gasoline engine G260PUH · 1	× 1	with carburetor/ normal muffler/ air cleaner
61494	Spindle Shaft (Φ 10)	× 1	with Spindle Shaft Tube /Bolt / Washer
61525	LSD System Z	× 1	with LSD Washer/ O-ring
61526	Helical Pinion Gear T13	× 1	
70220	O-ring 19.8 × 23.6 × 1.9	each2	with LSD Washer
70620	Spindle Washer M6	× 2	
70627	Spacer 2.6 × 4.5 × 3	× 2	
70628	Fuel Tank Cap(with air-bleed)	× 1	
80009	Socket Head Bolt M2.6 × 12	× 10	
80213	Button Head Bolt M6 × 10	× 10	

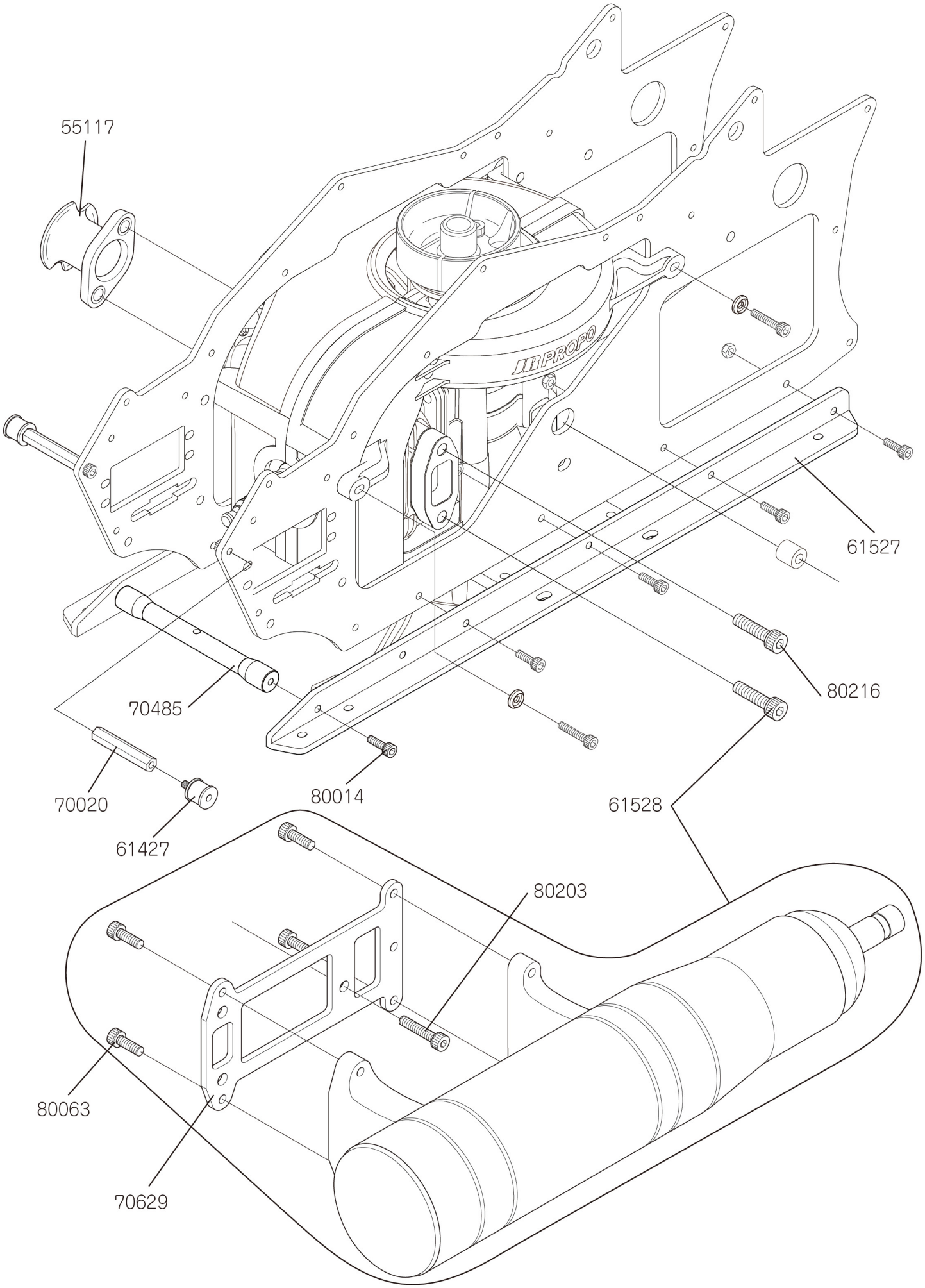
55117
JR PROPO
61527
80216
70485
80014
70020
61427
61528
80203
80063
70629

55117	Funnel(G260PUH・1)	× 1

61427	Landing Skid Damper Ver.2	× 4
61527	Lower Angle ZS	× each1
61528	Muffler JRM260S	× 1 complete set

70020	Cross Member L32	× 1
70485	Cross Member L86	× 2
70629	Muffler fixing plate	× 1

80014	Socket Head Bolt M3 × 10	× 10
80063	Socket Head Bolt M4 × 12	× 10
80203	Socket Head Bolt M4 × 20	× 10
80216	Socket Head Bolt M5 × 20	× 10

80095

80014

61530

80039

60117

80004

61000

80036

61529

80015

70048

83134

61524

61523

60117	Landing Skid Damper	× 4	
61000	Low Profile Landing Strut	× 2	with Setscrew M4 x 4
61523	Assembly Manual(GSR260ZS)	× 1	
61524	Decal for SPORTS	× 1	Logo Sticker
61529	Landing Skid	× 2	with Skid Cap
61530	Low Profile Brace Adapter	× 2	

70048	Landing Skid Cap	× 4
70163	O-ring 3.5 × 5.5 × 1	× 2

80004	Setscrew M4 × 4	× 10
80014	Socket Head Bolt M3 × 10	× 10
80015	Socket Head Bolt M3 × 12	× 10
80036	Plate Washer M3	× 10
80039	Nylon Lock Nut M3t2.8	× 10
80095	Flat Head Bolt M3 × 8	× 10
83134	Carbon Tail Boom L976	× 1

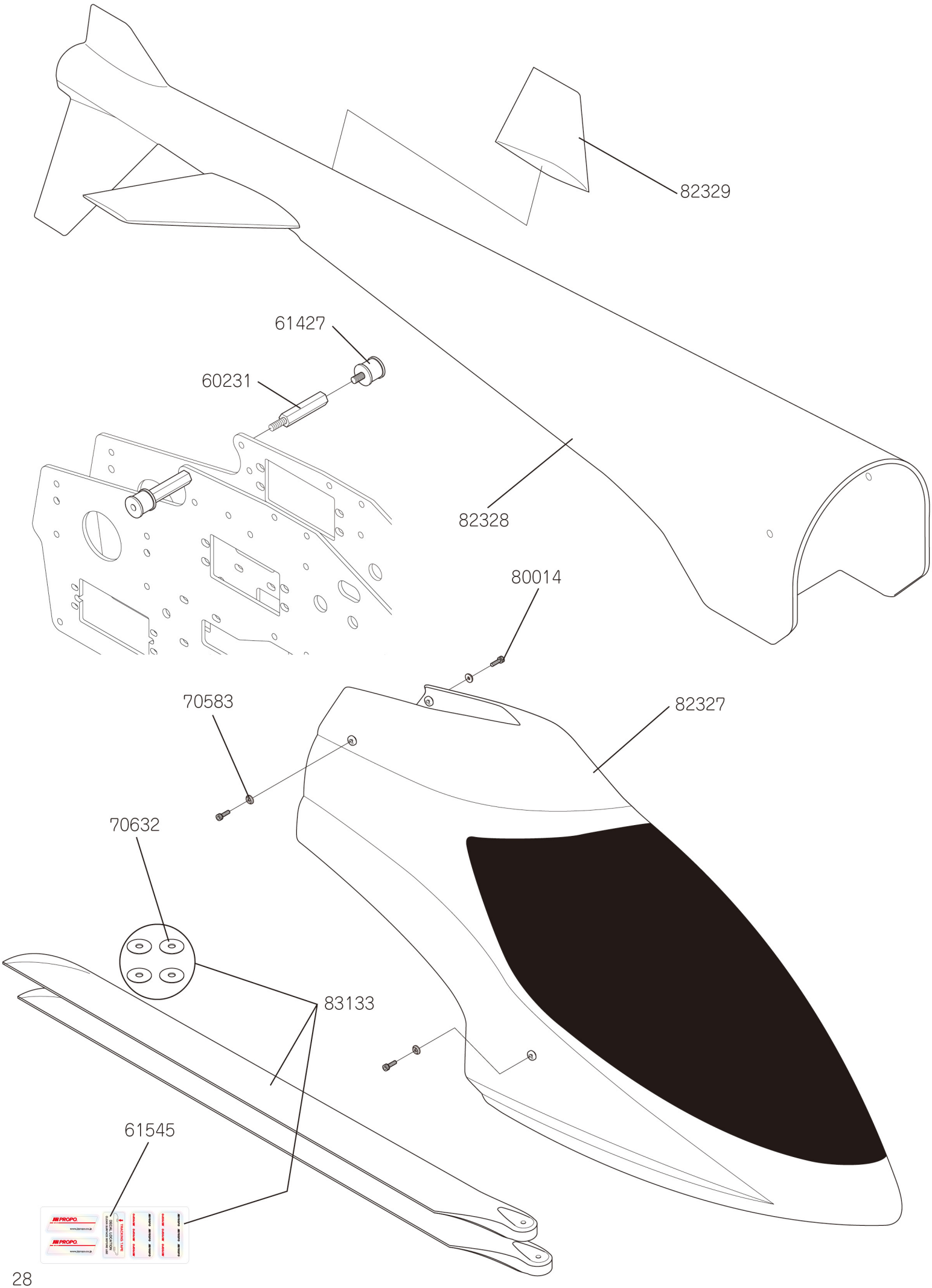
82329
61427
60231
82328
80014
70583
82327
70632
83133
61545

60231	Cross Member L24	× 2	
61427	Landing Skid Damper Ver.2	× 4	
61545	JR Tracking Tape(hologram)	× 2	

70583	Bolt Holder M3	× 10	
70632	Rotor Spacer(JRC810)	× 4	

80014	Socket Head Bolt M3 × 10	× 10	
82327	Front Body(260ZS)	× 1	
82328	Rear Body(260ZS)	× 1	
82329	Horizontal Fin(260ZS)	× 2	
83133	Carbon Main Rotor Blades JRC810	× 2	with Spacer / Tracking Tape

Japan Remote Control Co.,Ltd. Heli Division
35 Ookuroda Matsusaka City
Mie Pref. 515-0063 Japan

GSR260Z SPORTS1
100806